LED BoltPro | Linear, Surface

INSTALLATION INSTRUCTIONS

PRUDENTIAL LTG.

PRULITE.COM 213.746.0360

GENERAL NOTES

1. See row diagram or Prudential Ltg. layout plan (if provided).
   Begin all row mounting from left to right (see arrows).
2. Depending upon ceiling or wall construction reinforcement may be required at mounting locations.
3. Continuous row: Install one fixture section at a time.
4. Some field trimming of lenses may be required (see layout drawing).
5. We recommend using a chop saw with an 80 tooth blade for trimming lenses.

CROSS SECTION

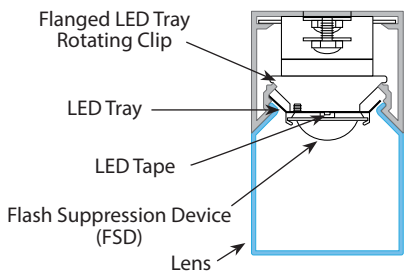

MOUNTING LOCATIONS

INDIVIDUAL FIXTURE:

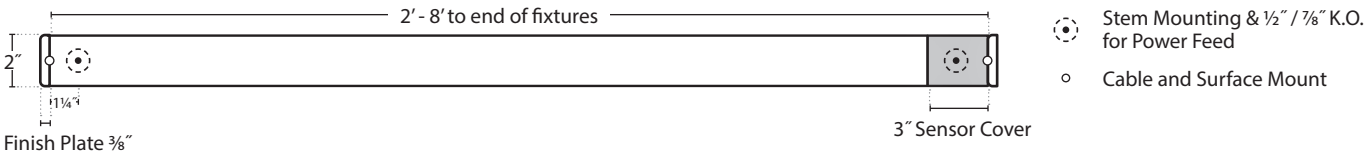

CABLE OR SURFACE MOUNTING WITH SENSOR COVER:

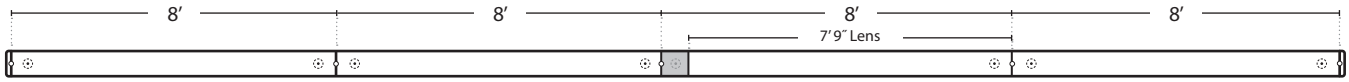

NOTE: 3″ sensor cover can be installed at the center or end of fixture.
Location must be specified at time of order.

LENS REMOVAL

1. Remove lens by pushing in sides and pulling one end of the lens away from the aluminum body.

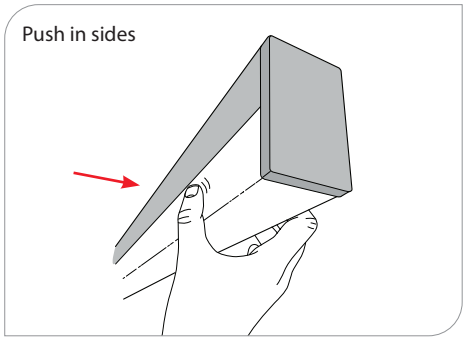

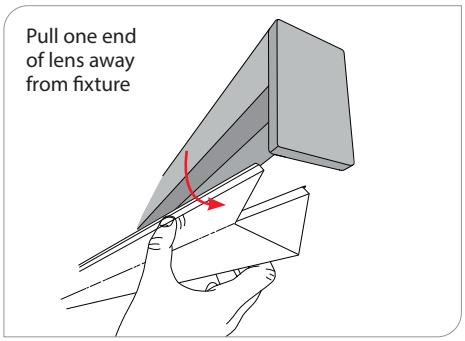

WARNING: Ground fixture in according with local and national electrical codes. Failure to do so may result in serious personal injury.

USA

Prudential Ltg. reserves the right to change design specifications or materials without notice. Please visit prulite.com for most current data.
© 2015 All rights reserved – All products manufactured at: Prudential Ltg. 1774 E. 21st Street, Los Angeles, CA 90058

BoltPro | Linear, Surface

PRUDENTIAL LTG.

PRULITE.COM 213.746.0360

INSTALLATION INSTRUCTIONS

LED TRAY REMOVAL

1. Unlock LED tray from clips and remove wires from LED drivers.

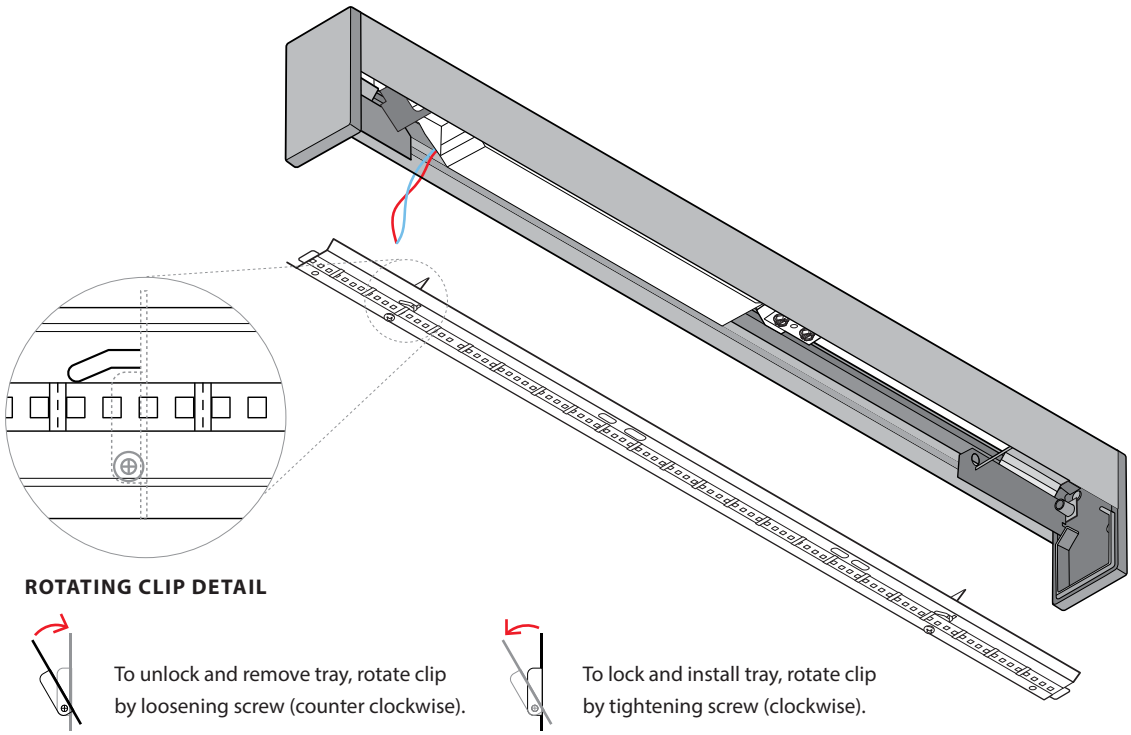

CABLE MOUNTING

CABLE PARTS
(SHIPPED SEPARATELY)

Mount cables to end plate brackets or joining brackets.
Reference separate cable installation instructions.

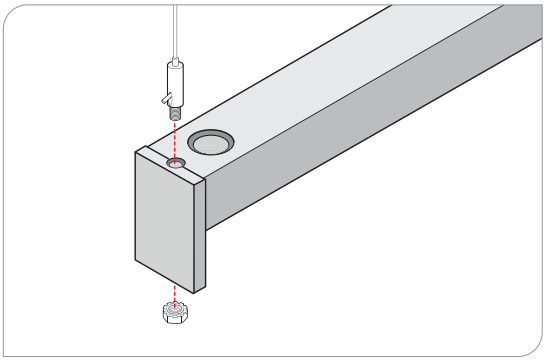

SURFACE MOUNTING

SURFACE PARTS

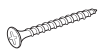

Dry Wall Screw
(BY OTHERS)

Mount fixture to ceiling or wall.

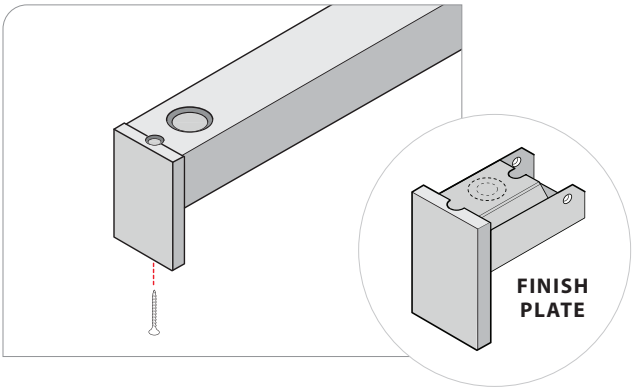

WARNING: Ground fixture in according with local and national electrical codes. Failure to do so may result in serious personal injury.

US★ Prudential Ltg. reserves the right to change design specifications or materials without notice. Please visit prulite.com for most current data.
© 2015 All rights reserved – All products manufactured at: Prudential Ltg. 1774 E. 21st Street, Los Angeles, CA 90058

BoltPro | Linear, Surface

PRUDENTIAL LTG.

PRULITE.COM 213.746.0360

INSTALLATION INSTRUCTIONS

JOINING DETAILS (OPTIONAL)

1. Follow joining detail instructions where fixtures are joined. **FOR END OF ROWS INSTALL FINISH PLATES.**
2. Use u-clips to Install flash suppression devices between lens joints.

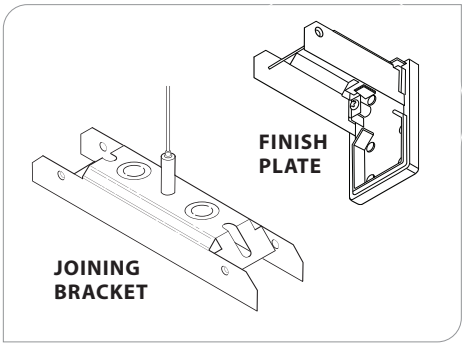

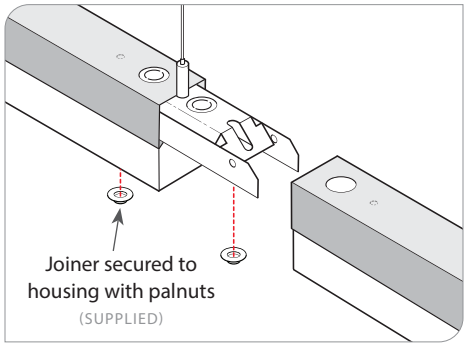

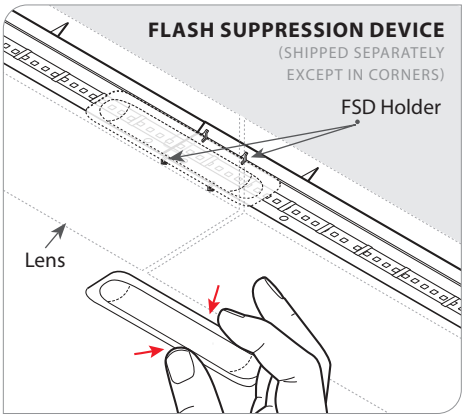

FINISHING STEPS

1. Make all wiring connections.
2. Re-install all LED trays. Ensure no wires are trapped between trays and clips and that they are tucked away to avoid shadows.
3. Install flash suppression device where there will be a lens seam.
4. Install/Re-Install all lenses.

EBCP — ELECTRICAL BOX COVERS (OPTIONAL)

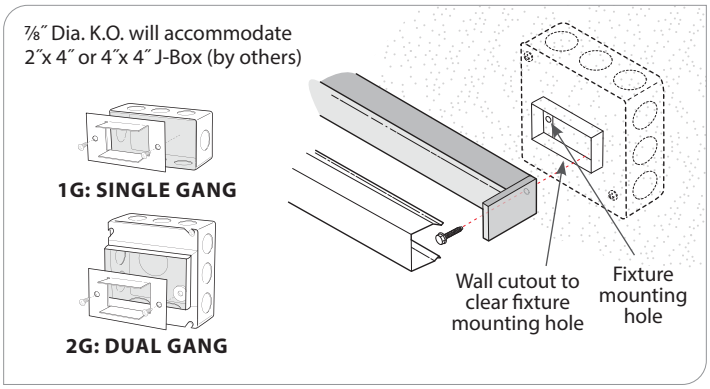

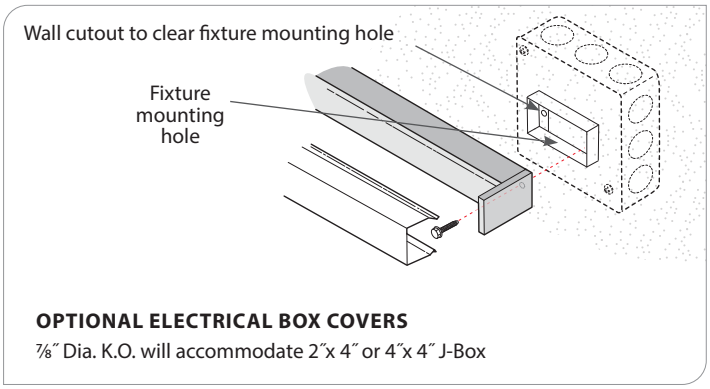

WARNING: Ground fixture in according with local and national electrical codes. Failure to do so may result in serious personal injury.

USA

Prudential Ltg. reserves the right to change design specifications or materials without notice. Please visit prulite.com for most current data.
© 2015 All rights reserved – All products manufactured at: Prudential Ltg. 1774 E. 21st Street, Los Angeles, CA 90058