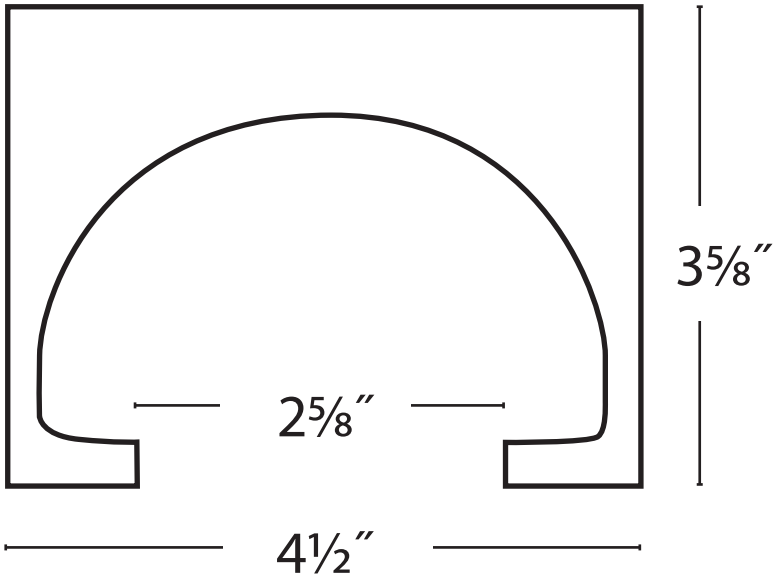
3⅝″
2⅝″
4½″