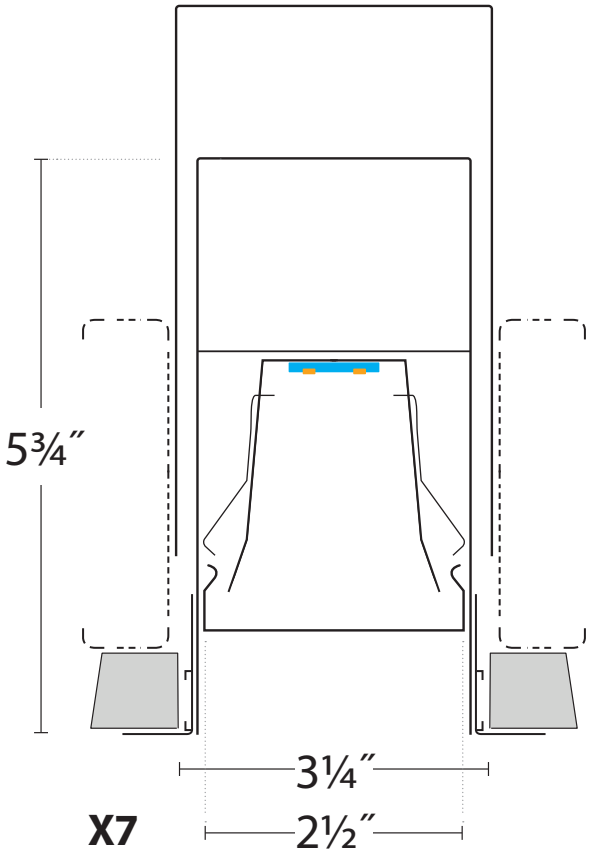

X7